EVPS 40 BK

Pressure compensation unit, polyamide, RAL 9005, M40

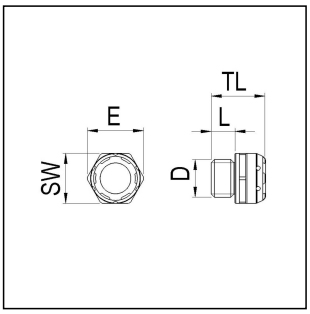

Products may differ in size, colour and appearance to those shown. If you require further information or customisation, please contact us directly.

RoHS

Material cable gland	Polyamide
Material membrane	ePTFE
Material sealing gasket	EPDM
Airflow at 70mbar	660 l/h
Temp. range min	-40 °C
Temp. range max	100 °C
Glow wire test	750 °C
Protection class	IP68 / IP69
Thread type	M
Ø Connection thread D	40
Lead	1,5
Length screw-in thread L	9 mm
Key width SW	46 mm
Collar diameter (E)	51 mm
Tightening torque	6 N m
Total length TL	15,4 mm
Product Color	RAL 9005
Order no. RAL 9005	10106597
Type	EVPS 40 BK
Packing unit	10
EAN number	4007686024630
Tariff number	39269097
ETIM-Classification	EC000441

Your Contact:
WISKA Hoppmann GmbH
Kisdorfer Weg 28 · 24568 Kaltenkirchen · Germany
☎ +49-4191-508-0 · 🖷 +49-4191-508-209
contact@wiska.de · www.wiska.com

Other technical data on request / subject to change without notice

Recommended accessories

EMUG 40 BK	10061785

19.04.2024

Your Contact:
WISKA Hoppmann GmbH
Kisdorfer Weg 28 · 24568 Kaltenkirchen · Germany
☎ +49-4191-508-0 · 🖷 +49-4191-508-209
contact@wiska.de · www.wiska.com

Other technical data on request / subject to change without notice

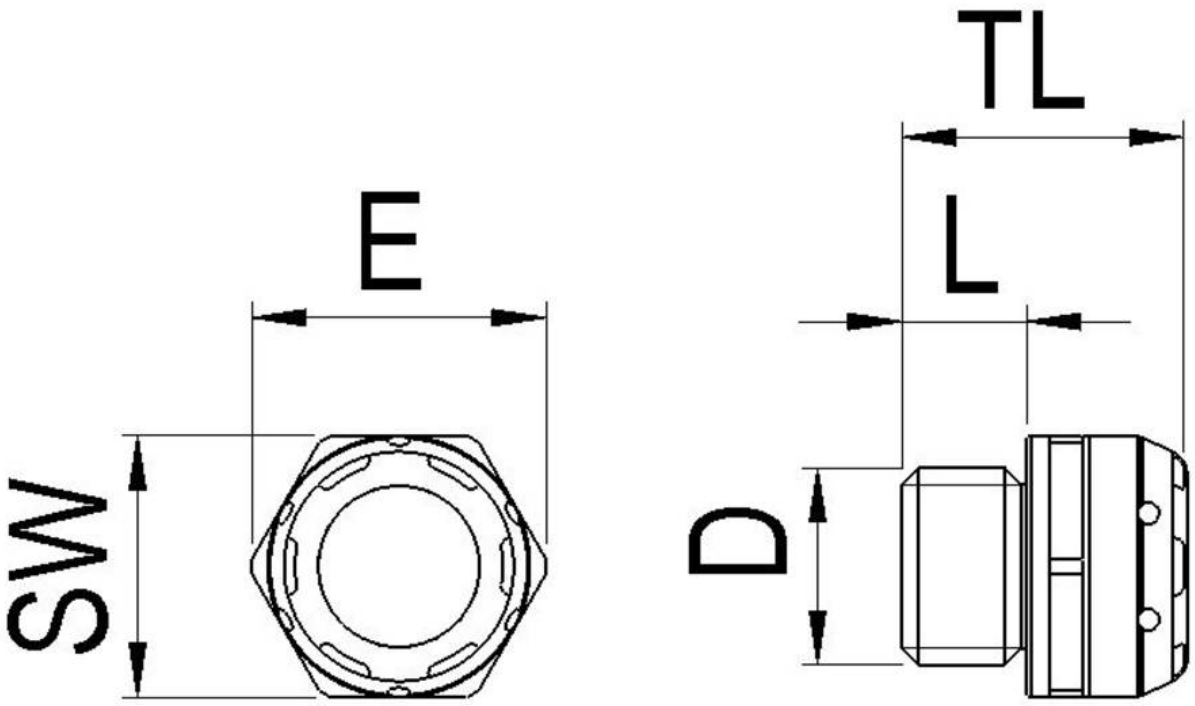

Your Contact:
WISKA Hoppmann GmbH
Kisdorfer Weg 28 · 24568 Kaltenkirchen · Germany
☎ +49-4191-508-0 · 🖷 +49-4191-508-209
contact@wiska.de · www.wiska.com

Other technical data on request / subject to change without notice